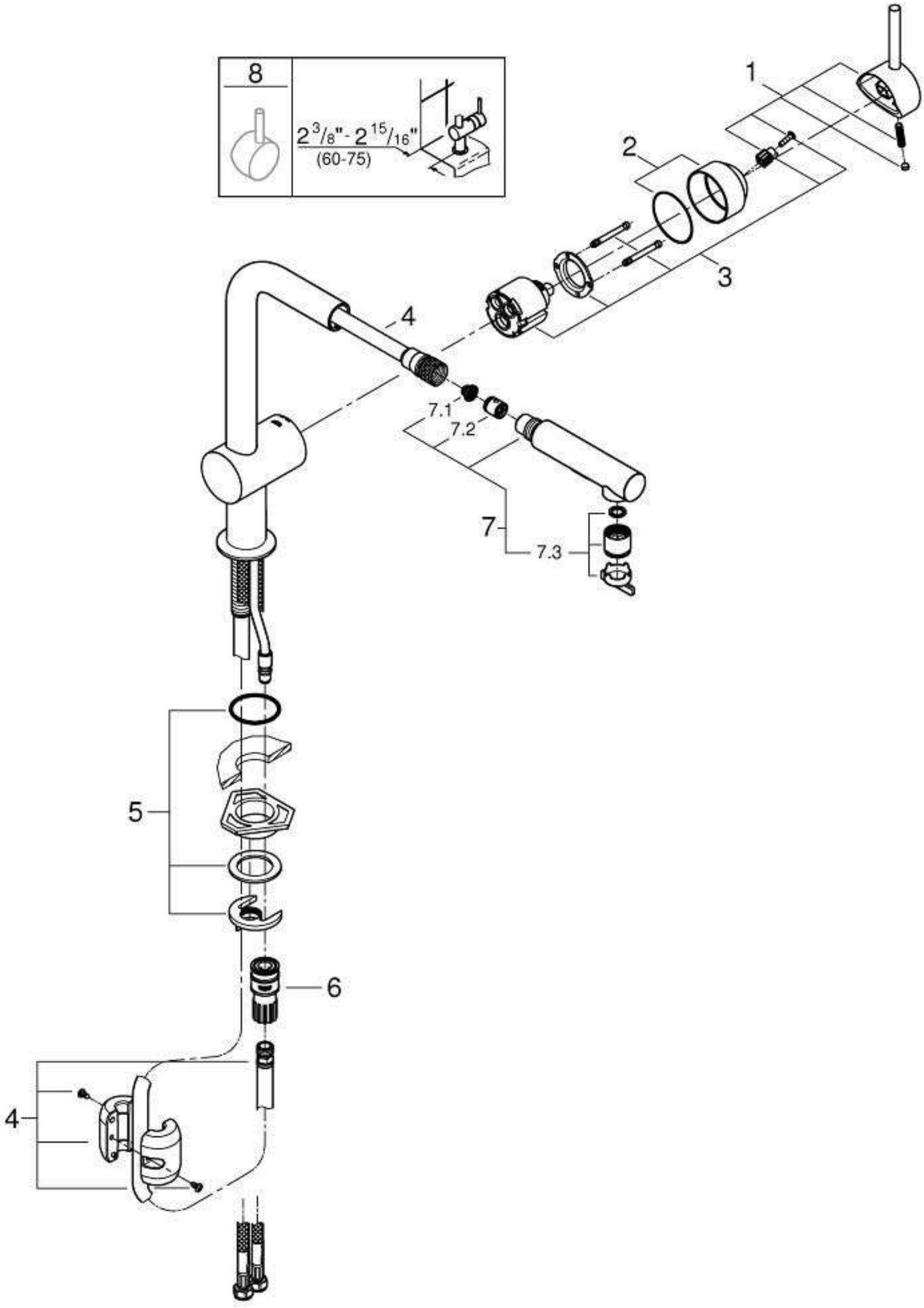
8
2 3/8" - 2 15/16"
(60-75)
1
2
3
4
7.1
7.2
7
7.3
5
6
4