PIA IFS AFR

59 3/4” x 31 7/8” x 19 3/4” Bathtub

OPTIONS

SIZE	SYSTEM	CONFIGURATION	COLOR
60 x 30	Activ-Air	Left	White
60 x 32	Soaker - no system	Right	
60 x 36	Whirlpool		
72 x 32	Whirlpool & Activ-Air		
72 x 36			

FEATURES

- Acrylic surface resistant to stains
- Alcove installation
- Leveling legs for an easy installation
- Above-the-floor rough (AFR) so pipes can be routed without breaking ground or relocating the drain

ATTRIBUTES

- Installation Type : Alcove
- Above-the-Floor Rough : Yes
- Material : Acrylic
- Number of Pieces : One
- Residential Warranty : 25 Years

Produits Neptune

DRAWING

59 3/4” x 31 7/8” x 19 3/4” Bathtub

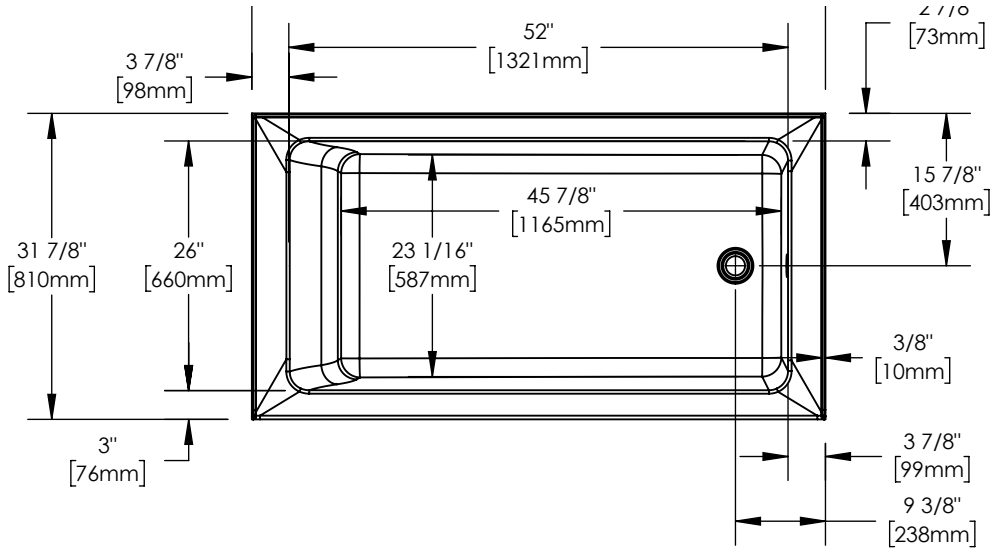

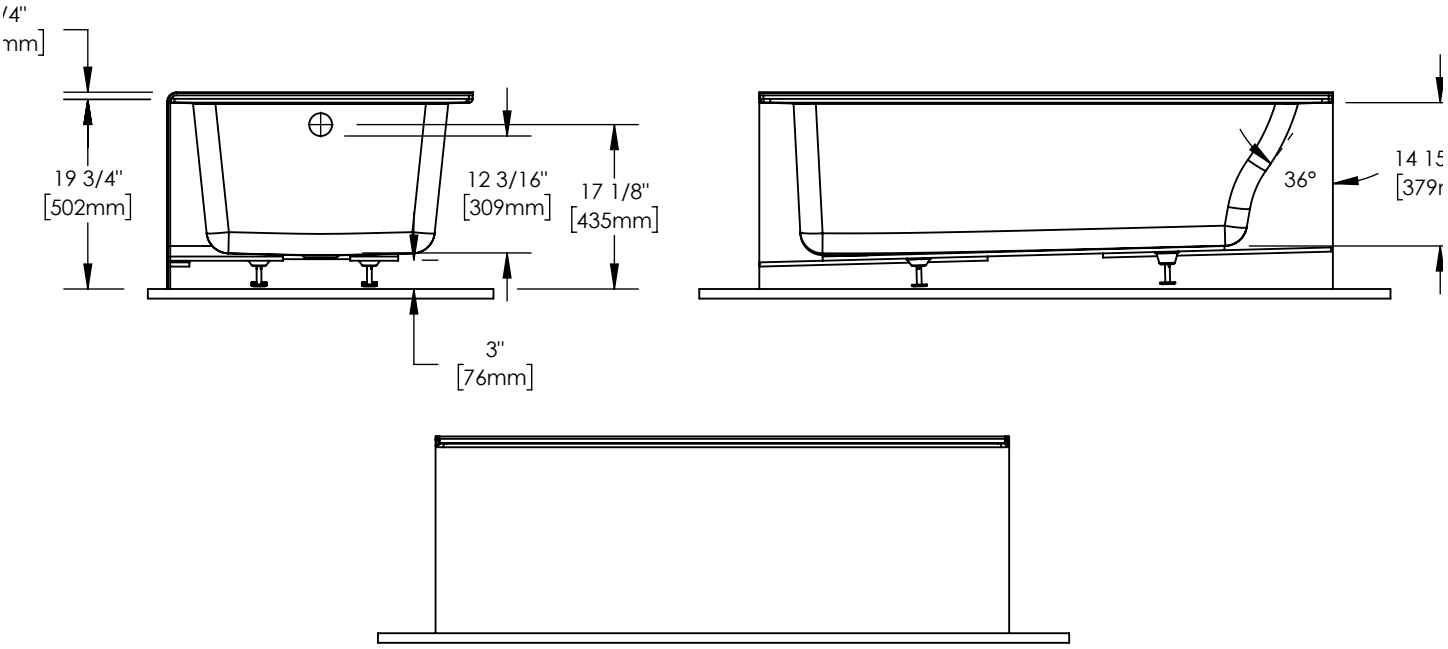

TECHNICAL SPECIFICATIONS

59 3/4” x 31 7/8” x 19 3/4” Bathtub

DIMENSIONS

PRODUCT LENGTH	BATHING WELL LENGTH	PRODUCT WIDTH	BATHING WELL WIDTH	PRODUCT HEIGHT
59 3/4”	45 7/8”	31 7/8”	23 1/4”	19 3/4”
DEEP SUMP HEIGHT	**DECK WIDTH**	**SKIRT HEIGHT**	**WEIGHT**	**DRAIN SIZE**
12 1/4”	3”	19 3/4”	85 Lbs	2”
DRAIN CLEARANCE	**SHIPPING LENGTH**	**SHIPPING WIDTH**	**SHIPPING HEIGHT**	
3”	33 1/2”	20 1/4”	63 1/4”	

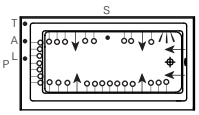

Whirlpool/Activ-Air combo left drain
Whirlpool/Activ-Air combo right drain
Included: 6 round jets, 31 Activ-Air micro-jets, two air controls, one 7.5 A pump, one blower with heating element (200 W) and two pneumatic controls.

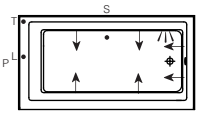

Whirlpool left drain
Whirlpool right drain
Included: 6 round jets, two air controls, one 7.5 A pump and one pneumatic control.

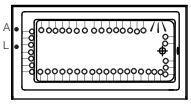

Activ-Air left drain
Activ-Air right drain
Included: 32 Activ-Air micro-jets, one blower with heating element (200 W) and one pneumatic control.

Project:

Contractor:

Representative:

Date:

Tel:

Notes: